Lightcurtain in robust aluminium housing

F3ET2

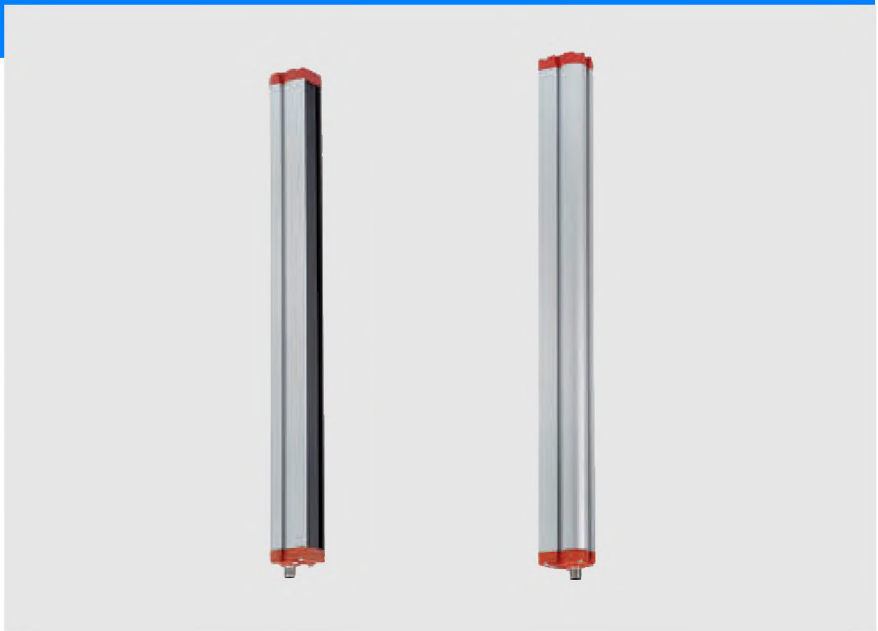

The F3ET2 lightcurtains provide a reliable area monitoring in a robust housing. The M12 5-pin connectors and optical synchronisation between emitter and receiver allow a fast and simple installation without special requirements.

- Optical synchronisation for reliable operation without additional wiring
- Robust aluminium housing
- NPN/PNP and light on/dark on selectable

Ordering Information

Sensor type	Detection area (mm)	Pitch	Sensing distance	Channels	Connection method				Output	Order code[1]
Through-beam 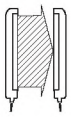	150	5 mm	3 m	30	–	5 pin	–	–	PNP/NPN	F3ET2-005-150
		18 mm	15 m	8	–		–	–		F3ET2-018-150
	300	5 mm	3 m	60	–		–	–		F3ET2-005-300
		18 mm	15 m	16	–		–	–		F3ET2-018-300
	450	5 mm	3 m	90	–		–	–		F3ET2-005-450
		18 mm	15 m	24	–		–	–		F3ET2-018-450
	600	5 mm	3 m	120	–		–	–		F3ET2-005-600
		18 mm	15 m	32	–		–	–		F3ET2-018-600
	900	5 mm	3 m	180	–		–	–		F3ET2-005-900
		18 mm	15 m	48	–		–	–		F3ET2-018-900
	1200	5 mm	3 m	240	–		–	–		F3ET2-005-1200
		18 mm	15 m	64	–		–	–		F3ET2-018-1200
	1500	5 mm	3 m	300	–		–	–		F3ET2-005-1500
		18 mm	15 m	80	–		–	–		F3ET2-018-1500
	1800	5 mm	3 m	360	–		–	–		F3ET2-005-1800
		18 mm	15 m	96	–		–	–		F3ET2-018-1800
	2100	18 mm	15 m	112	–		–	–		F3ET2-018-2100

[1] Light-ON / Dark-ON selectable

Rating/Specifications

Item		Through-beam	
		F3ET2-005_	**F3ET2-018_**
Sensing distance		0 to 3 m	0 to 15 m
Vertical detection area		0 to Max_M mm; Max_M: 150, 300, 450, 600, 900, 1200, 1500, 1800[1]	0 to Max_M mm; Max_M: 150, 300, 600, 900, 2100[2]
Minimum detectable object size		10 mm	30 mm
Pitch		5 mm	18 mm
Response time		4 ms + 80 µs × number of beams	
Power-on delay		1 s max	
Light source (wave length)		Infrared LED (880 nm)	
Power supply voltage		24 VDC ±20%	
Current consumption		150 mA max	
Ambient temperature		–10 to 55°C	
Storage temperature		–25 to 70°C	
Degree of protection		IEC 60529 IP65	
Protective circuits		Reverse polarity protection, output short-circuit protection	
Material	Case	Aluminium	
	Cover	Polycarbonate	

[1] Models with different detection ranges are available in 50 mm intervals. Please contact your OMRON representative.

[2] Models with different detection ranges are available in 150 mm intervals. Please contact your OMRON representative.

Output circuits

Please connect the light curtain as described below:

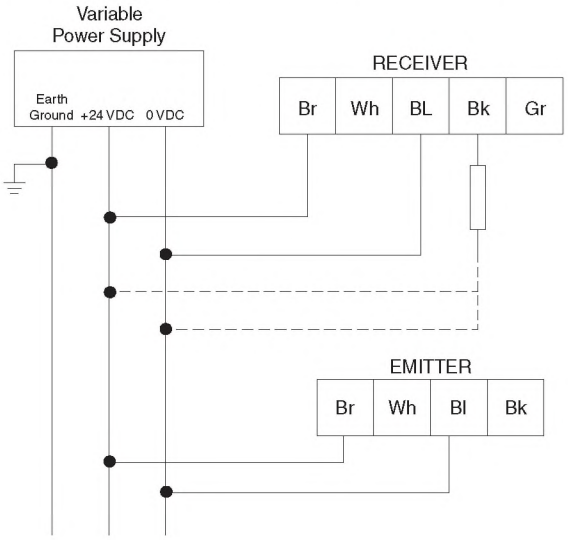

Connector PIN assignment - Receiver

Type	Internal wiring	Pin	Colour	Signal name
M12 n4 pole		1	Brown	+Vs
		2	White	not used
		3	Blue	0V
		4	Black	PNP/NPN output
		5	Gray	not used

Connector PIN assignment - Transmitter

Type	Internal wiring	Pin	Colour	Signal name
M12 n4 pole		1	Brown	+Vs
		2	White	not used
		3	Blue	0V
		4	Black	Not used

Dimensions

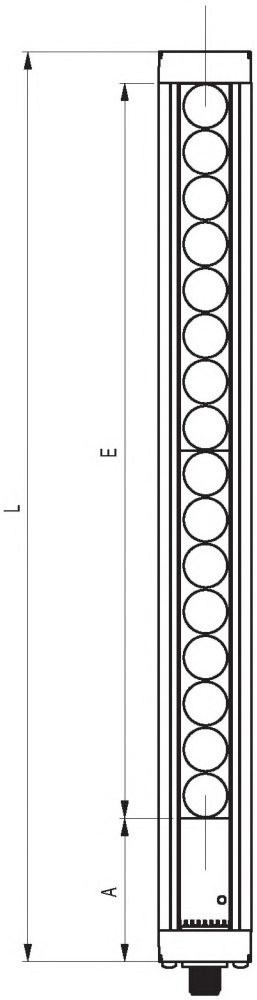

L: Total length
E: Detection zone
A: Dead zone without detection capability

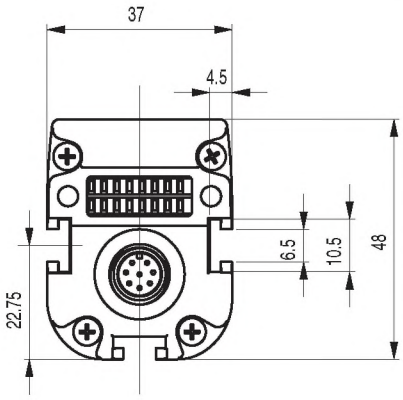

Item number	Detection Zone E (mm)	Total length L (mm)
F3ET2-005-150	159	231.4
F3ET2-018-150	147	218.7
F3ET2-005-300	318	390.4
F3ET2-018-300	294	364.7
F3ET2-005-450	477	549.4
F3ET2-018-450	441	511.7
F3ET2-005-600	636	708.4
F3ET2-018-600	588	658.7
F3ET2-005-900	954	1026.4
F3ET2-018-900	882	952.7
F3ET2-005-1200	1272	1344.4
F3ET2-018-1200	1176	1246.7
F3ET2-005-1500	1590	1662.4
F3ET2-018-1500	1470	1540.7
F3ET2-005-1800	1908	1980.4
F3ET2-018-1800	1764	1834.7
F3ET2-018-2100	2058	2128.7

All dimensions shown are in mm

Operation

The F3ET lightcurtain features optical synchronization. This function is provided by the upper beam located on the opposite side of the connector (see illustration on the right). During operation this beam must always be kept free. Otherwise it will result in a longer response frequency of the light curtain.

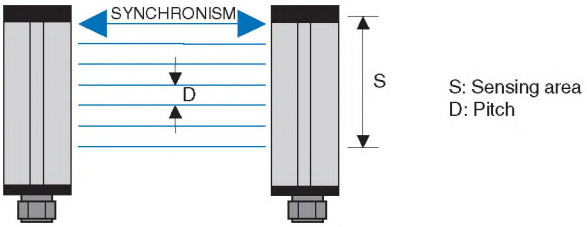

Indicator LEDs

For functions of indicator LEDs please refer to the tables below:

Status of Receiver is displayed by 5 LEDs

Disposition of indicator	Name of indicator	Colour
POWER RUN FREE BREAK STATUS RX	POWER	Green
	RUN	Yellow
	FREE	Green
	BREAK	Red
	STATUS	Yellow

Status of Transmitter is displayed by 5 LEDs

Disposition of indicator	Name of indicator	Colour
POWER STATUS 1 RANGE STATUS 2 TX	POWER	Green
	STATUS 1	Yellow
	RANGE	Green
	Not used	
	STATUS 2	Yellow

Selector Switches

Operation mode and distance setting can be changed by selector switches. To access selector switches unscrew the end cap of the receiver unit:

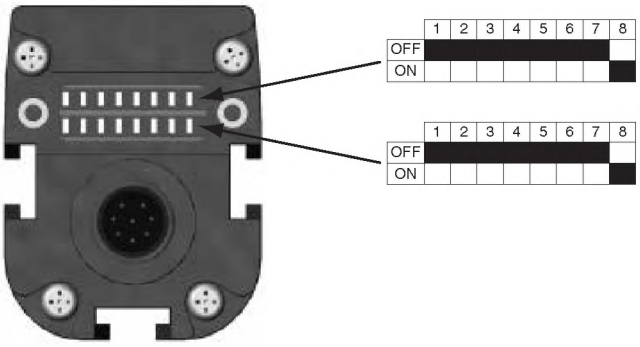

Transmitter

Dip-SW	Status	Function
1, 2, 3, 4, 7, 8	OFF	Not USED
	ON	Not USED
5	OFF	FAR (Default)
	ON	NEAR

Receiver

Dip-SW	Status	Function
1, 4, 5, 7, 8	OFF	Not USED
	ON	Not USED
2	OFF	PNP operation (Default)
	ON	NPN operation
3	OFF	Dark on (Default)
	ON	Light on

Note: Selector setting must only be carried out when the receiver is not connected to the power supply. There are two lines of dip switches in each transmitter and receiver. The settings must be done for both lines.

Mounting

Mounting accessories

The F3ET2 system is mechanically installed by using the T-slots on the two sides or the back-side of the housing.

Use the movable bolts, washers, growers and nuts to fix the mounting brackets as shown in the picture

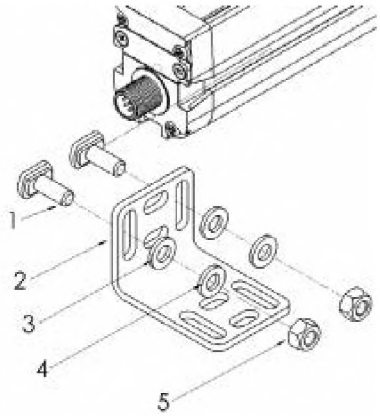

ID	Description
1	movable M6 bolt
2	fixing braket
3	M6 washer
4	M6 Grower
5	M6 nut

Note: Shipment contains different quantity of brackets, depending on the length of the SLC. Longer SLC contains a higher number of brackets, following the rule of every 400 mm one bracket.

Additional mounting rigidity

It is recommended that the distance between the mounting brackets is 400 mm or less for optimum performance of the F3ET2 system.

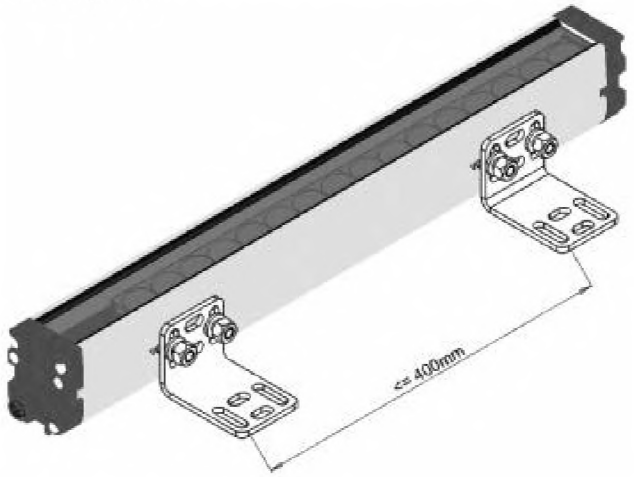

Mechanical Mounting

Please mount the light curtains in proper alignment as shown in the pictures below by using the brackets provided with the light curtains.

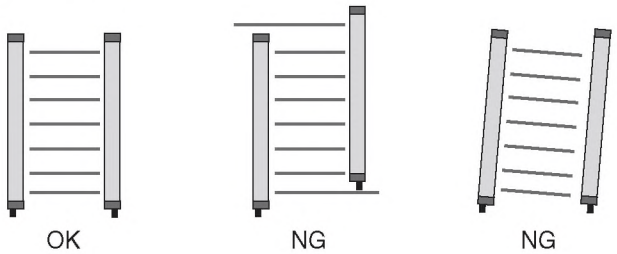

If F3ET2 is installed at long distances the laser alignment aid F39-TGR-LLK2-CL provides a visible laser spot for simplified installation.

If several light curtains are installed close to each other, interference of the light curtains must be avoided. In this case the assembly should be carried out as follows:

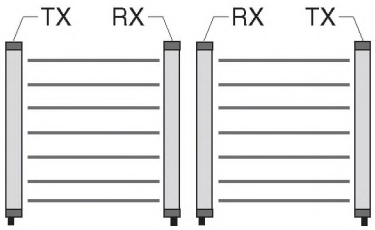

Cable connectors

For pin arrangement and connecting the wires refer to Output Circuits.

Type	Features	Material		Order code	
		Nut	Cable	Straight	Angled
M12	5 wires	CuZn	PVC 2 m	XS2F-M12PVC5S2M	XS2F-M12PVC5A2M
			PUR 2 m	XS2F-M12PUR5S2M	XS2F-M12PUR5A2M
			PVC 5 m	XS2F-M12PVC5S5M	XS2F-M12PVC5A5M
			PUR 5 m	XS2F-M12PUR5S5M	XS2F-M12PUR5A5M

Precautions

⚠ **WARNING**

The F3ET multi-beam photoelectric sensor is not a safety component for ensuring the safety of people which is defined in EC directive (2006/42/EC) or by any other regulations or standards.

Power Supply Voltage and Output Load Power Supply Voltage

Do not connect an AC power supply to the Sensor. If AC power (100 VAC or more) is supplied to the Sensor, it may be permanently damaged. Make sure that the power supply to the Sensor is within the rated voltage range. If a voltage exceeding the rated voltage range is supplied to the Sensor, it may it may be permanently damaged.

Operating Environment

Do not use the sensor in locations with explosive or flammable gas. Make sure that the product is operated in accordance with IP65 standards.

Do not subject the sensor to excessive shock when mounting.

When you use the sensor in the vicinity of an inverter motor, be sure to connect the protective earth ground wire of the motor to earth. Failure to ground the motor may result in malfunction of the sensor.

Mounting the Sensor

Do not strike the sensor with a hammer or any other tool during the installation of the Sensor.

Cleaning

Never use paint thinners or other organic solvents to clean the surface of the product

M12 Connector

Always turn OFF the power supply to the sensor before connecting or disconnecting the metal connector. Hold the connector cover to connect or disconnect it.

Secure the connector cover by hand. Do not use pliers; otherwise the connector may be damaged.

If the connector is not connected securely, it may be disconnected by vibration or the proper degree of protection of the sensor may not be maintained.